Electrolux PROFESSIONAL

ITEM #

MODEL #

NAME #

SIS #

AIA #

Frozen
Frozen granita and cream dispenser with 1 insulated bowl, led light

560097 (SP1NewL)

Frozen Granita and Frozen Cream Dispenser with 1x5 l insulated bowl and LED light, R290

Short Form Specification

Item No.

1x5 lt bowl frozen granita and frozen cream dispenser. Ideal for the production of chilled specialties: creamy desserts, sherbets, mousses and similar products. Works with water or milk/based dried products or with milk mixtures ready to be poured into the bowl. Compact design. Extremely user-friendly thanks to the screw design for adjusting the consistency of the product. Hybrid control of consistency, it self-adjusts to ensure that the product always has the same consistency. The bowl is illuminated by LED lights. The machine automatically stops when the cover is opened. No ice outisde the tank with the insulated tank. Rounded shapes with stainless steel finishings and white plastics. All parts that come into contact with the food are in stainless steel or plastic, can be removed for easy cleaning.

APPROVAL:

Main Features

- Ideal for production of chilled specialties: creamy desserts, sorbet, mousses and similar products.
- Works with water or milk/based dried products or with brik mixtures ready to be poured into the bowl.
- Perfect solution for bars, restaurants, cafeterias, coffee shops, hotels and all the other HoReCa operators who desire reliable piece of equipment.
- The machine automatically stops when the cover is opened.
- No more ice or condensation outside the tank with the insulated tank.
- Rounded shapes with stainless steel finishing and white plastics.
- The insulated tank guarantees higher cooling efficiency and lower effect of the external temperature on product's preparation and maintenance time reducing condense and draining; it is the best solution in hot climate conditions.
- New design of the screw to adjust the product consistency makes the equipment extremely user-friendly.
- Hybrid control of consistency. The integrated software allows the equipment to self-adjust to ensure that the product has always the same consistency, from the first to the last drop dispensed.
- The bowl of SP ULTRA is also illuminated by LED lights, from above and below, giving the equipment a more attractive look, enhancing the product, increasing its visibility and encouraging impulse purchases.

Construction

- All parts that are in contact with food are in stainless steel or plastic, can be removed for easy cleaning and are dishwasher safe.
- Compact design.

Frozen
Frozen granita and cream dispenser with 1 insulated bowl, led light

Front

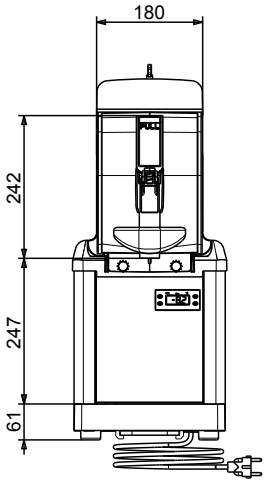

Side

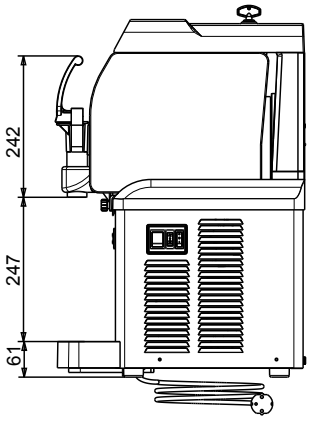

Top

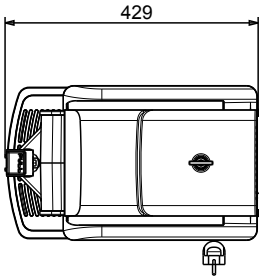

Electric

Supply voltage:	
560097 (SP1NewL)	220-240 V/1 ph/50 Hz
Electrical power max.:	0.285 kW

Key Information:

External dimensions, Width:	262 mm
External dimensions, Depth:	429 mm
External dimensions, Height:	613 mm
Net weight:	28 kg

Sustainability

Refrigerant type:	R290
Refrigerant weight:	68 g

The company reserves the right to make modifications to the products without prior notice. All information correct at time of printing.

2024.10.08